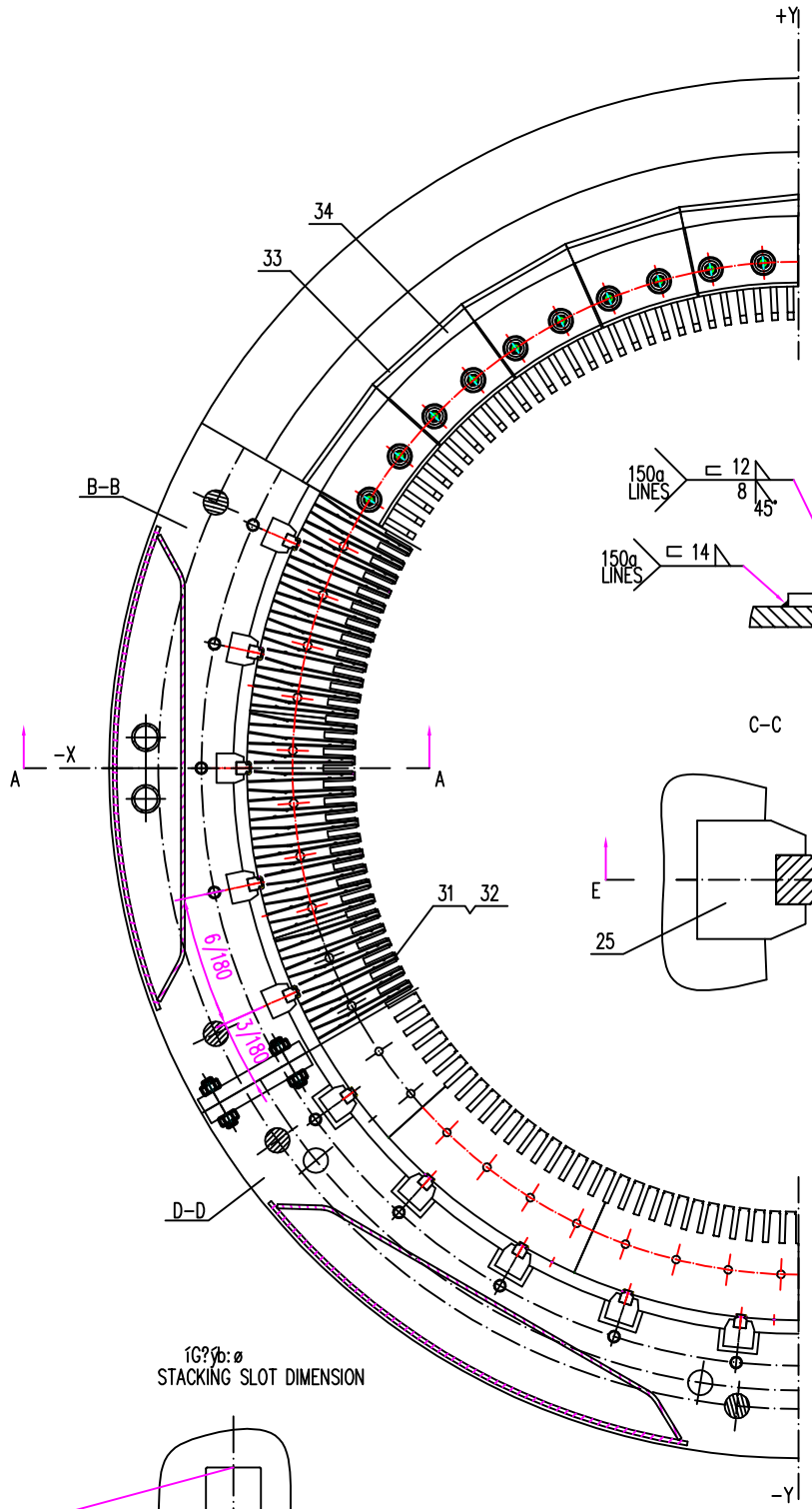

1G?Yb:ø
STACKING SLOT DIMENSION

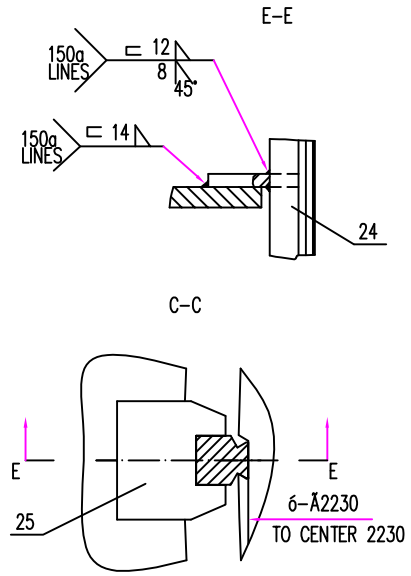

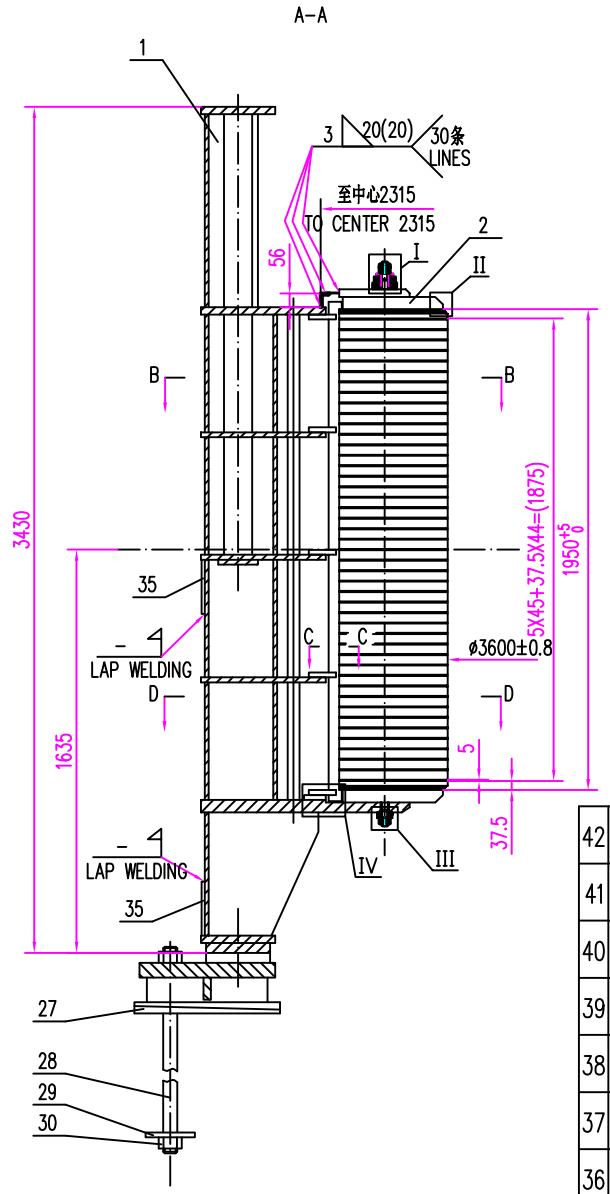

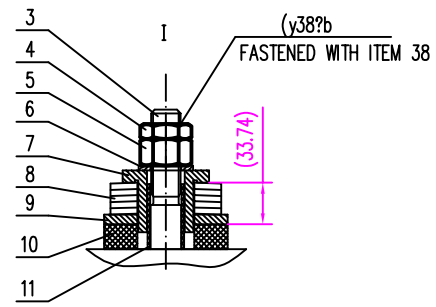

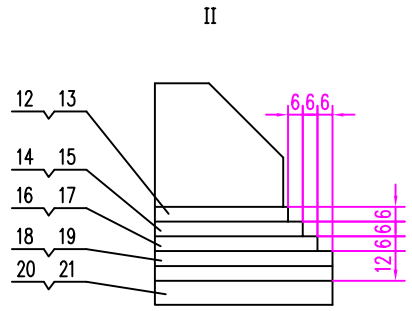

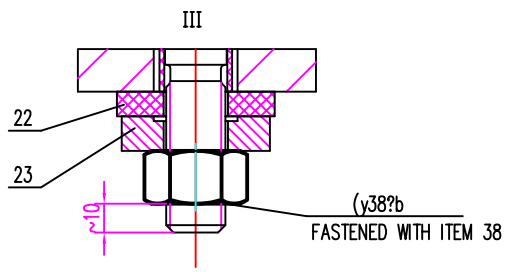

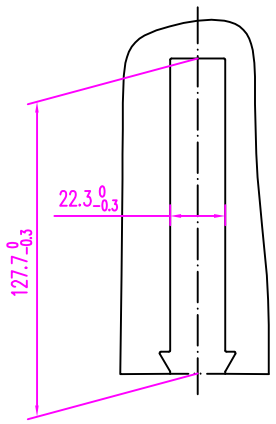

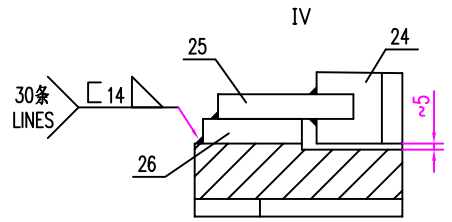

NOTES
1.BEFORE STACKING,FRAME SHALL BE CLEANED UP.
2.ITEM 36 AND ITEM 37 SHALL BE STACKING ON THE CENTER LOC
THE STATOR SEGMENT NO.10,NO.23,NO.36.
3.STACKING FACTOR OF CORE SHALL BE NOT LESS THAN 0.96.
4.AFTER BEING STACKED, AND COLD PRESSED CORE LOSS TEST.
5.AFTER CORE LOSS TEST,TIGHTENING CORE STUDS SHOULD BE PE
WITH THE TORQUE OF 840N.M.

€/?B
1.íGM:§???rÀv??.
2.?+(,10,23,36Á?µ-ÃMn,h?íBy36?y37.
3.Á?í?ûp??NŽ0.96.
4.ÕLšPÁ??+µ?¥.
5.Á?í????<?, 6?ZÁ_Õ?.
6.Á_Õ???Á??Š'!,Š'?é:840N.m.

IT.	CODE NO.	NAME OF PART	REQD.	S. WT.	REMARKS
42		专用稀释剂 THINNER	35kg		
41		ENA042淡黄灰面漆 LACQUR	95kg		
40		专用稀释剂 THINNER	10kg		
39		LcP064重防腐底漆 LACQUR	40kg		
38		可赛新厌氧密封胶TS1277 GLUE	5	50ml/瓶	
37	2F9447.10	定子扇形片 STATOR PUNCHING	60	0.1499	
36	2F9447.4	定子扇形片 STATOR PUNCHING	420	0.3001	
35		3X220X660钢板Q235A STEEL PLATE	10	3.42	
34		3钢板Q235A STEEL PLATE	30	0.66	
33		5X36X56角钢Q235A ANGLE IRON	30	1.69	
32	2F9452	通风槽片 DUCK SPACER	90	1.92	
31	2F9451	通风槽片 DUCK SPACER	630	3.84	
30	GB/T 6170	螺母M56 NUT	24	1.053	
29	4F5404	垫板 SPACER PLATE	12	24.5	
28	4F5405	螺杆 SCREW	12	41	
27	4F2042	楔 DOVETAIL RIB	18	17	
26		20X90X160钢板Q235A STEEL PLATE	30	2.3	
25	4F3916	托板 DOVETAIL RIB	150	1.35	
24	4F22413	定位筋 DOVETAIL RIB	30	37.6	
23	4F21899	垫圈 WASHER	60	0.25	
22	4F21902	垫圈 WASHER	60	0.05	
21	2F9447.0	定子扇形片 STATOR PUNCHING	~44250	1.2674	
20	2F9447.6	定子扇形片 STATOR PUNCHING	~6500	0.6332	
19	3F14189.0	定子粘胶片 STATOR PLATE ASSEMBLY	112	7.6044	
18	3F14189.4	定子粘胶片 STATOR PLATE ASSEMBLY	16	3.7992	
17	3F14189.1	定子粘胶片 STATOR PLATE ASSEMBLY	56	7.542	
16	3F14189.5	定子粘胶片 STATOR PLATE ASSEMBLY	8	3.768	
15	3F14189.2	定子粘胶片 STATOR PLATE ASSEMBLY	56	7.4808	
14	3F14189.6	定子粘胶片 STATOR PLATE ASSEMBLY	8	3.7374	
13	3F14189.3	定子粘胶片 STATOR PLATE ASSEMBLY	56	7.413	
12	3F14189.7	定子粘胶片 STATOR PLATE ASSEMBLY	8	3.7038	
11	4F22414	绝缘管 INSULATING BUSHING	300	0.14	
10	4F21901	垫圈 WASHER	60	0.22	
9	4F21900	垫圈 WASHER	60	0.38	
8	GB/T 1972	碟簧A90X46X5X7 CANNULA	300	0.1845	
7	4F21898	套管 CANNULA	60	0.5	
6	GB/T 97.1	垫圈 24 WASHER	60	0.03213	
5	GB/T 6170	六角螺母M24 NUT	120	0.0888	
4	GB/T 6172.1	六角薄螺母M24 NUT	60	0.04792	
3	4F22412	穿心螺杆 STUD	60	8.85	
2	3F14188	齿压板 STATOR FLANGE &	30	50.6	
1	1F7640	定子机座 STATOR FRAME	1	30135	

Rev. No.	DATE	DESCRIPTION OF REVISION	ENDORSED

DRAWING/DOCUMENT REVISIONS

CLIENT: VIETNAM ELECTRICITY HYDRO POWER PROJECT MANAGEMENT BOARD No.7
AN KHE HYDROPOWER PLANT
AN KHE-KA NAK HYDROPOWER PROJECT
SUPPLIER: DONGFANG ELECTRIC CORPORATION
DES./MANU: DONG FANG ELECTRICAL MACHINERY CO.,LTD.

SHEET OF | WT.(kg) 100140 | SCALE

ŠPÁÃÅM
ASSEMBLY OF STATOR CORE

Rev. F

OWNER No. 2697-AK08-CK-DFEM-12
MANUFACTURER No. 1F7644-S